ZN-805

(1)	(2)	(3)
(4)	(5)	(6)

(7)

1. x6 (6x40)mm
2. x3 (8X16)mm
3. x2 (6X20)mm
4. x6 6X13mm
5. x3 8mm
6. x5
7. x1
8. x1 5mm

A

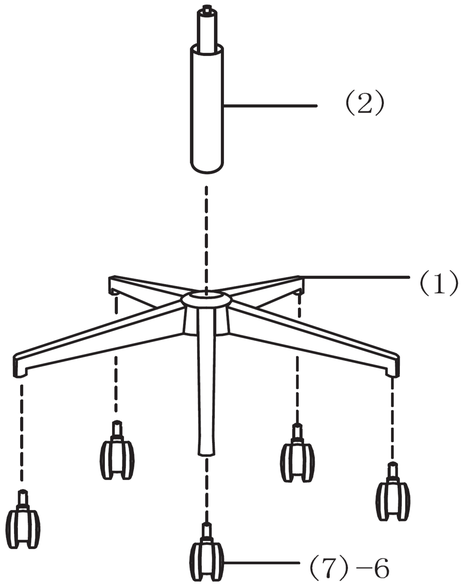

B

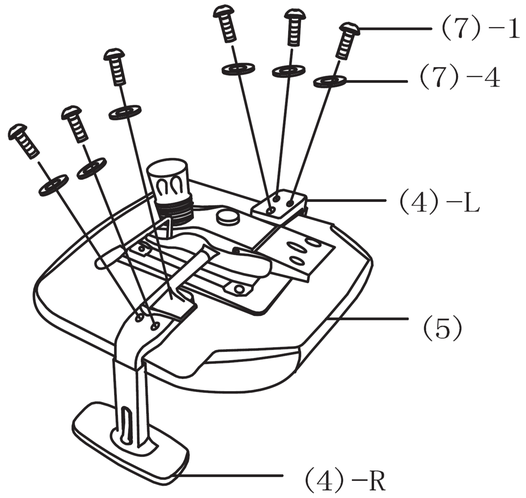

C

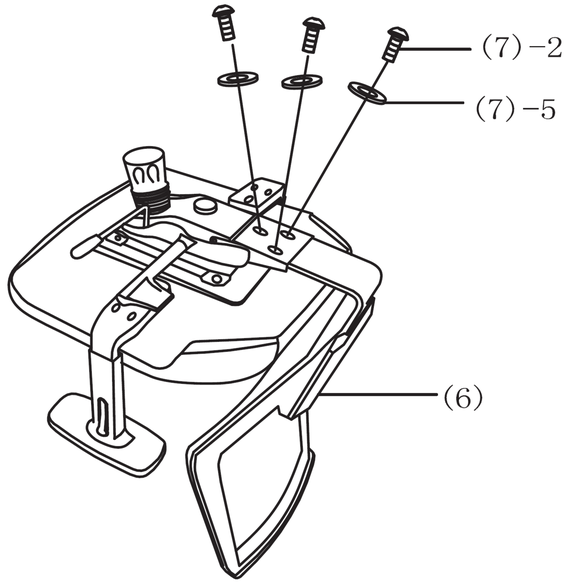

D

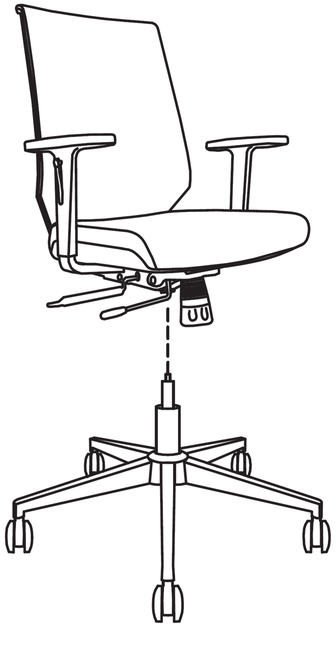

E

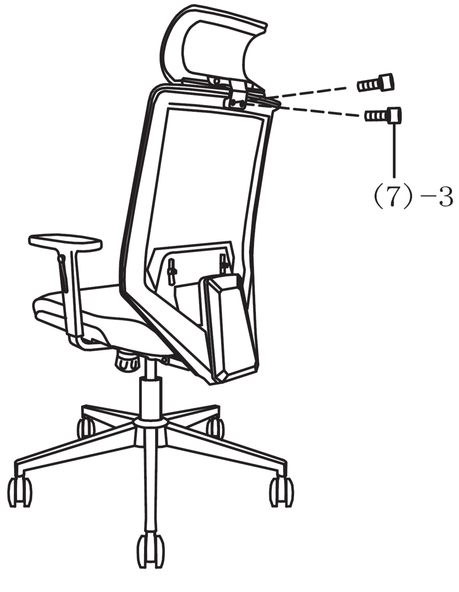
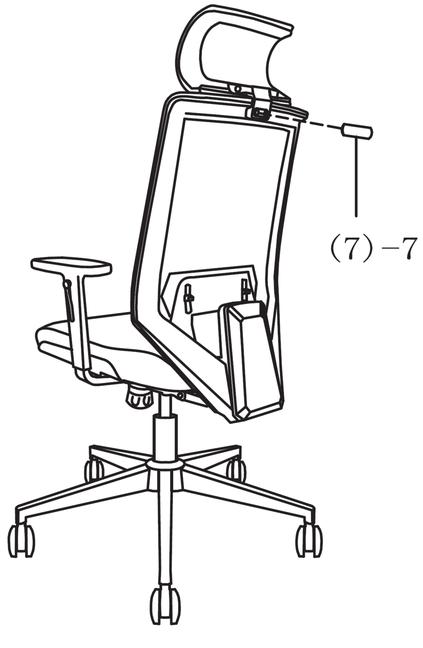
F