ZN-807

(1)	(2)	(3)
(4)	(5)	(6)
		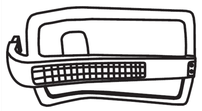

(7)

1. x10 (6x30) mm
2. x2 (6X20) mm
3. x6 (6X13) mm
4. x4 (6X16) mm
5. x5
6. x1
7. x1 5mm

A

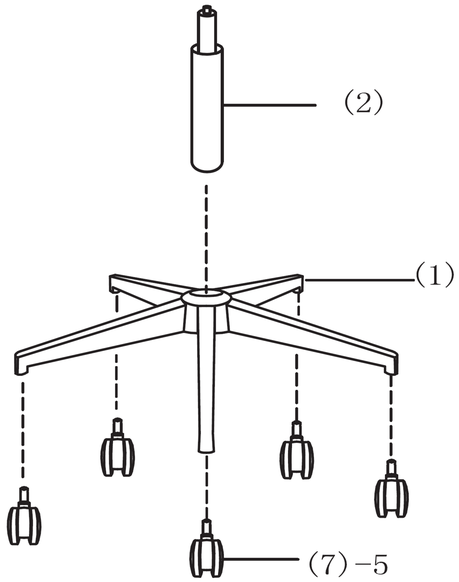

B

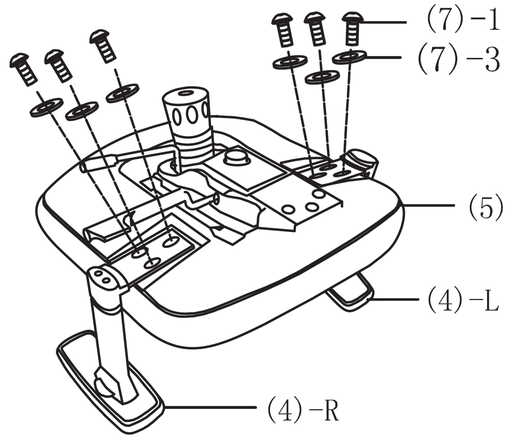

C

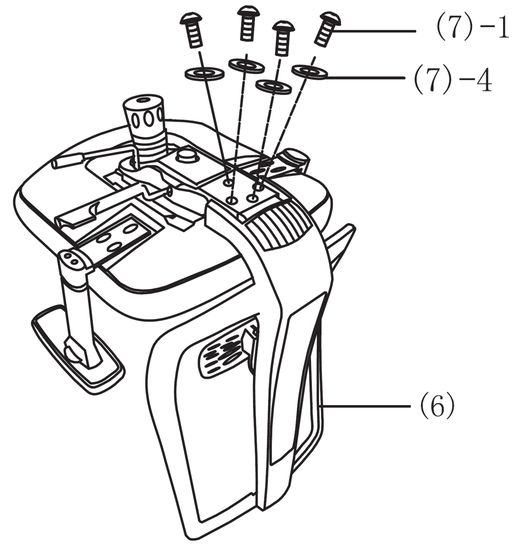

D

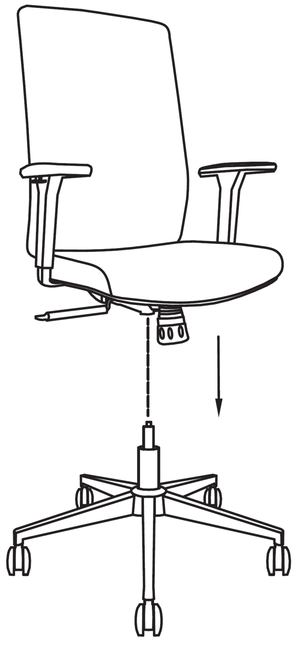

E

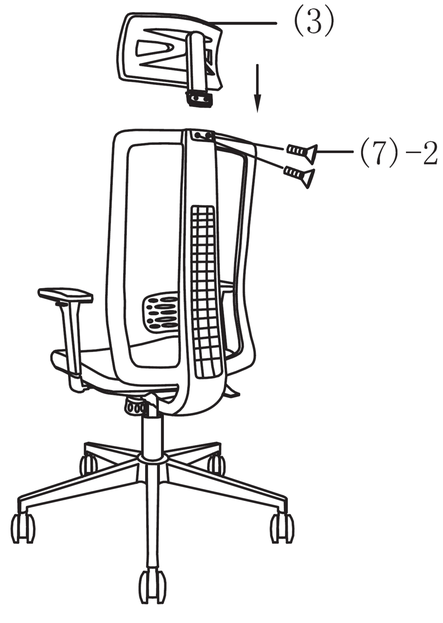
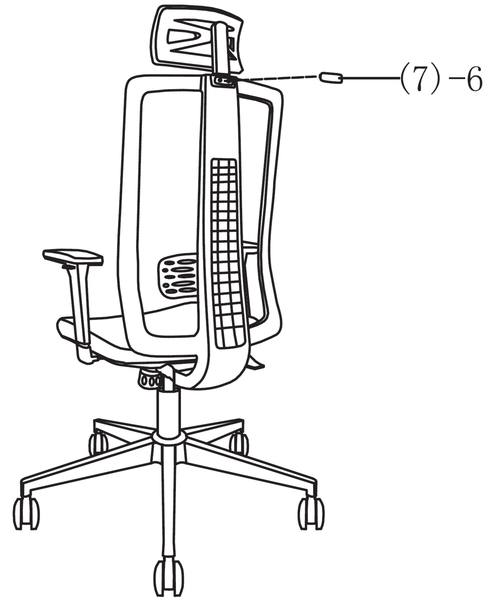
F